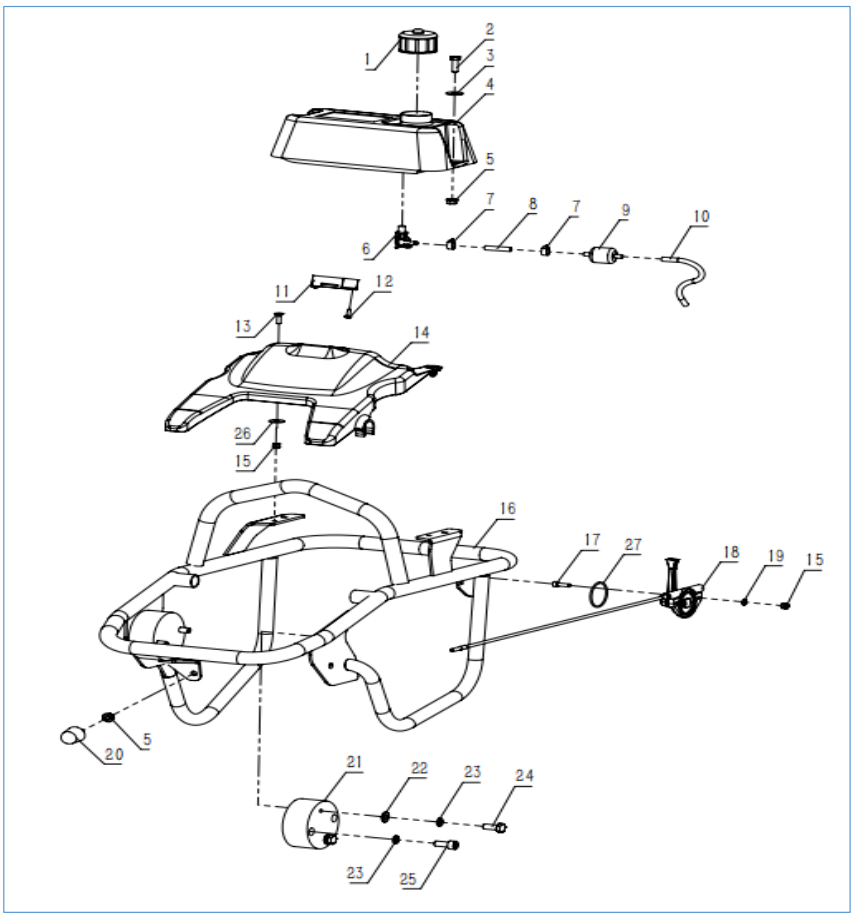

Lp	Kod	Nazwa	Ilość
A		**Protetive frame Assy**	
A-01	540600	Cap, Fuel tank	1
A-02	540601	Hexagon bolt M8×25	2
A-03	540602	Big flat washer φ8	2
A-04	540603	Fuel tank	1
A-05	540604	Hex nut with flange M8	3
A-06	540605	Fuel cock	1
A-07	540606	Fuel hose clamp	2
A-08	540607	Fuel hose	1
A-09	540608	Fuel filter	1
A-10	540609	Fuel hose	1
A-11	540610	Timer	1
A-12	540611	Cross recessed pan head tapping screw M5×16	2
A-13	540612	Socket counter-sunk bolt M6×20	2
A-14	540613	Plastic cover	1
A-15	540614	Lock nut M6	4
A-16	540615	Frotetive frame	1
A-17	540616	Socket head bolt M6×20	2
A-18	540617	Throttle lever L670	1
A-19	540618	Flat washer φ6	2
A-20	540619	Bumper	1
A-21	540620	Shock absorber	2
A-22	540621	Flat washer φ10	4
A-23	540622	Spring washer φ10	8
A-24	540623	Hexagon bolt M10×25	4
A-25	540624	Socket head bolt M10×25	4
A-26	540625	Big flat washer φ6	2
A-27	540626	O-ring seal φ53×3.5	1

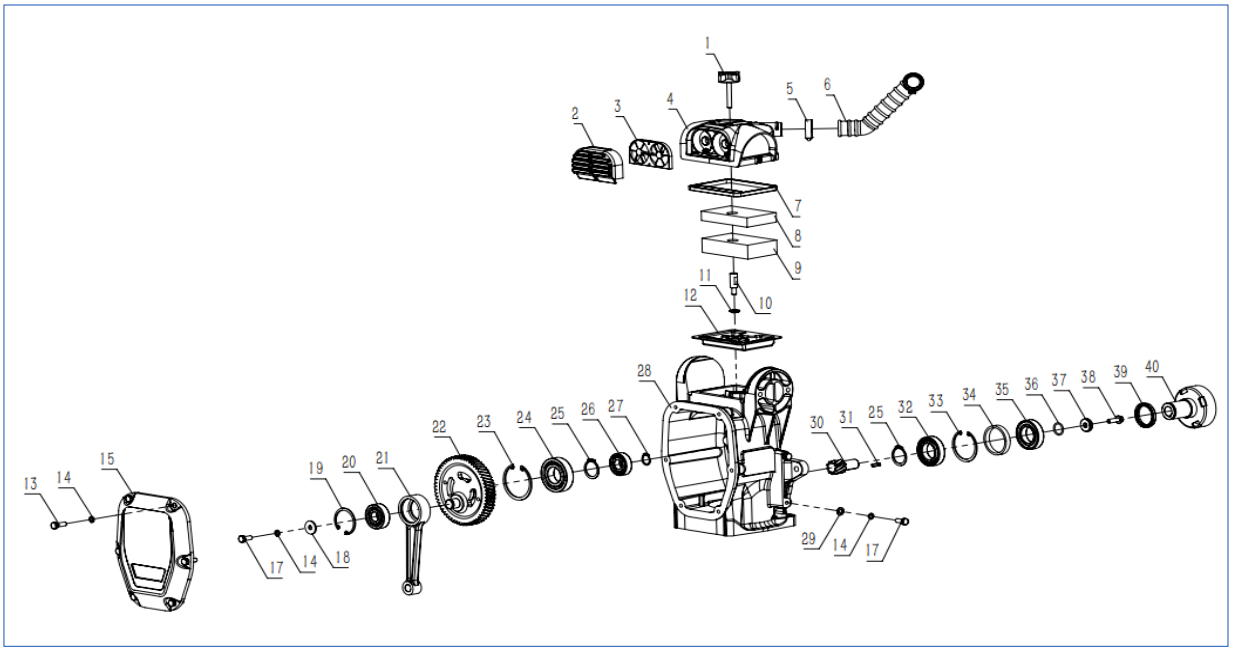

Lp	Kod	Nazwa	Ilość
B		**Crankcase Assy**	
B-01	540627	Screw, sec-air filter	1
B-02	540628	Air inlet hood	1
B-03	540629	Seal plate	1
B-04	540630	Cover, sec-air filter	1
B-05	540631	Clamp	2
B-06	540632	Syphon, sec-air filter	1
B-07	540633	Strip	1
B-08	540634	Sponge	1
B-09	540635	Sponge	1
B-10	540636	Fixed screw	1
B-11	540637	Washer	1
B-12	540638	Bottom cover	1
B-13	540639	Hexagon bolt M8×25	6
B-14	540640	Spring washer φ8	11
B-15	540641	Front cover	1
B-17	540642	Hexagon bolt M8×20	5
B-18	540643	Big flat washer φ8	1
B-19	540644	Bore circlip φ52	1
B-20	540645	Deep groove ball bearing 6304	1
B-21	540646	Connecting rod	1
B-22	540647	Gear 59×2.25	1
B-23	540648	Bore circlip φ72	1
B-24	540649	Deep groove ball bearing 6207	1
B-25	540650	Shaft circlip φ35	2
B-26	540651	Deep groove ball bearing 6204	1
B-27	540652	Shaft circlip φ20	1
B-28	540653	Crankcase	1
B-29	540654	Flat washer φ8	4
B-30	540655	Gear 10×2.25	1
B-31	540656	Flat key 5×20	1
B-32	540657	Deep groove ball bearing 6007-Z	1
B-33	540658	Bore circlip φ62	1
B-34	540659	Bushing, bearing	1
B-35	540660	Deep groove ball bearing 6007-2Z	1
B-36	540661	O-ring seal 21.2×2.65	1
B-37	540662	Bushing, clutch drum	1
B-38	540663	Hex bolt with flange M8×25	1
B-39	540664	Oil seal 40×52×7	1
B-40	540665	Clutch drum	1

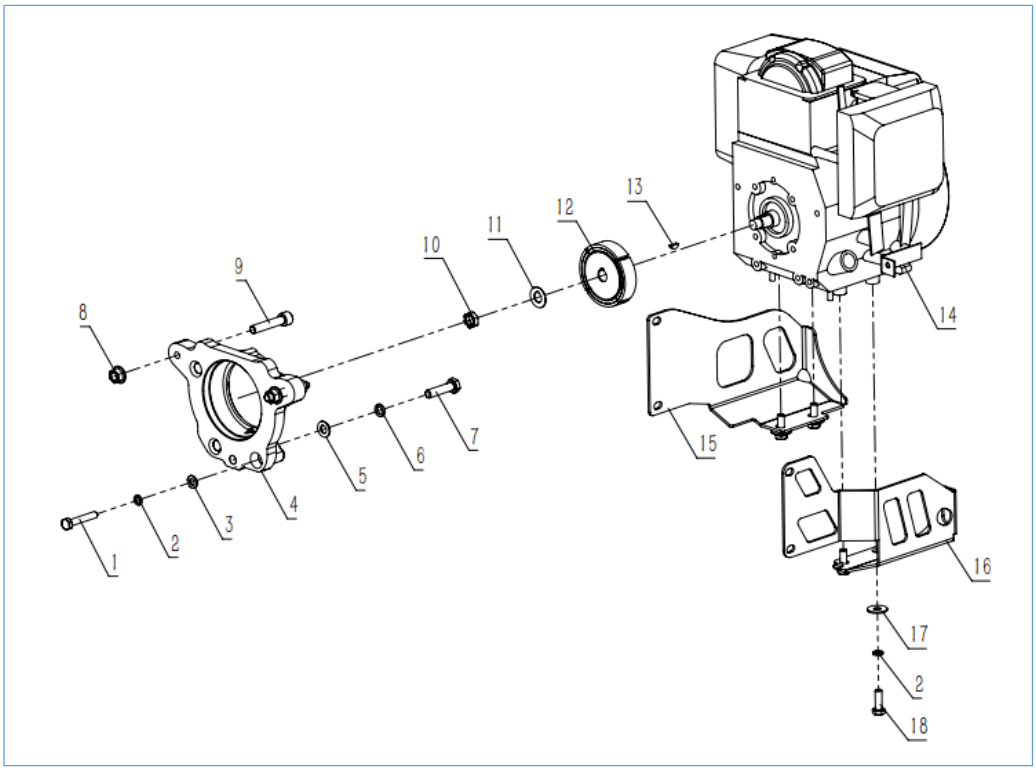

Lp	Kod	Nazwa	Ilość
C		**Engine Assy**	
C-01	540666	Hexagon bolt M8×45	4
C-02	540667	Spring washer φ8	8
C-03	540668	Flat washer φ8	4
C-04	540669	Connecting plate	1
C-05	540670	Flat washer φ10	1
C-06	540671	Spring washer φ10	1
C-07	540672	Hexagon bolt M10×40	1
C-08	540673	Hex nut with flange M10	2
C-09	540674	Socket head bolt M10×50	2
C-10	540675	Hex thin nut M12	1
C-11	540676	Lock washer	1
C-12	540677	Clutch Assy	1
C-13	540678	Woodruff key 4mm	1
C-14	540679	Engine	1
C-15	540680	Protective guard (L)	1,5
C-16	540681	Protective guard (R)	1,5
C-17	540682	Big flat washer φ8	4
C-18	540683	Hexagon bolt M8×25	4

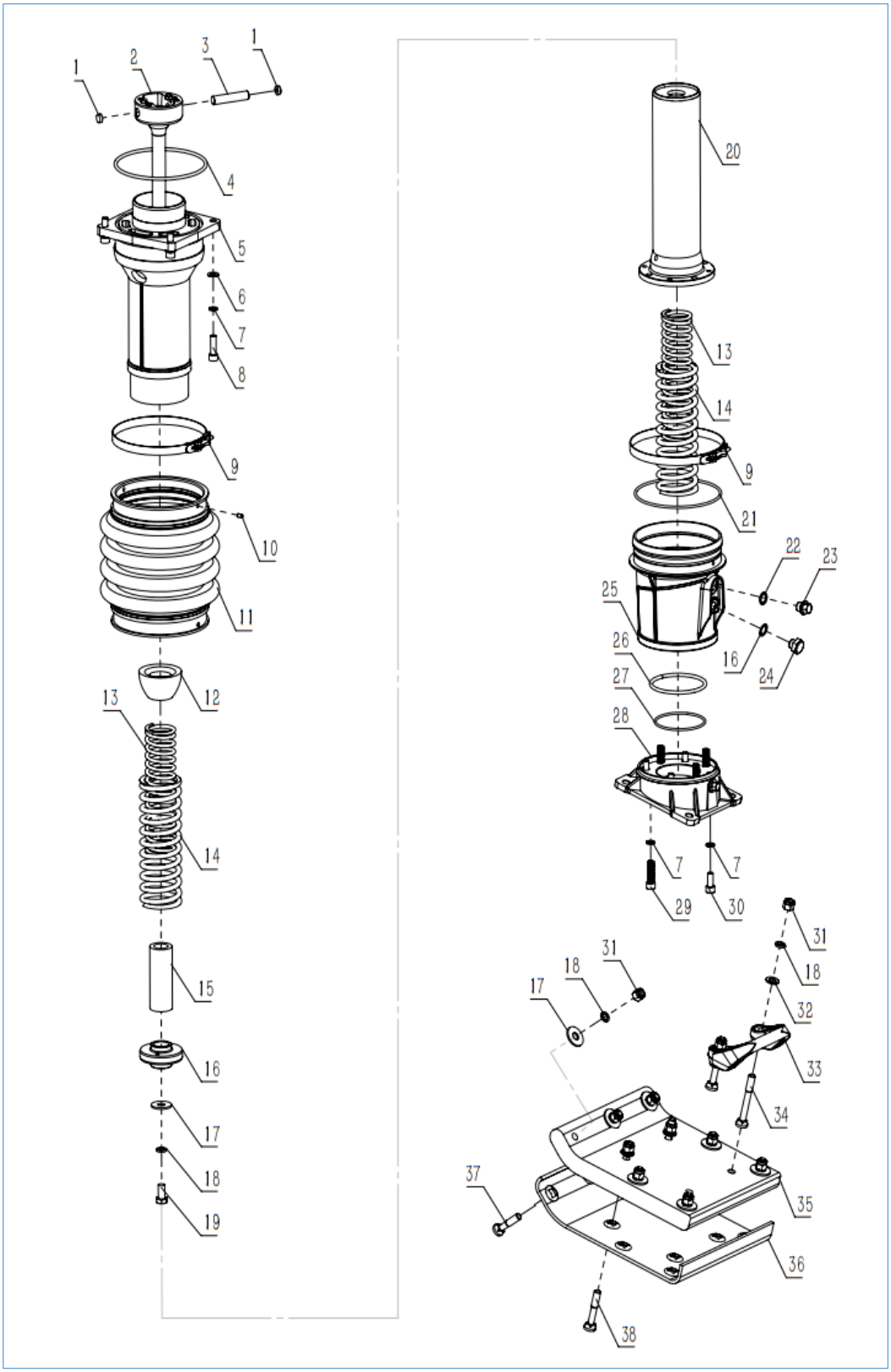
1
2
3
1
4
5
6
7
8
9
10
11
12
13
14
15
16
17
18
19
20
13
14
9
21
22
23
25
26
16
24
27
28
7
7
29
30
31
18
17
31
18
32
33
34
37
35
36
38

Lp	Kod	Nazwa	Ilość
D		**Foot plate Assy**	
D-01	540684	Nylon plug	2
D-02	540685	Piston rod	1
D-03	540686	Piston pin	1
D-04	540687	O-ring seal 160×5.3	1
D-05	540688	Guide cylinder	1
D-06	540689	Flat washer φ10	4
D-07	540690	Spring washer φ10	12
D-08	540691	Socket head bolt M10×35	4
D-09	540692	Clamp	2
D-10	540693	Pin 6×10	2
D-11	540694	Bellows	1
D-12	540695	Shock absorber	1
D-13	540696	Inner spring	2
D-14	540697	Outer spring	2
D-15	540698	Stopper,lower	1
D-16	540699	Central plate	1
D-17	540700	Big flat washer φ12	8
D-18	540701	Spring washer φ12	12
D-19	540702	Hexagon bolt M12×1.5	1
D-20	540703	Spring cylinder	1
D-21	540704	O-ring seal 152×4	1
D-22	540705	Copper washer φ16	2
D-23	540706	Oil plug bolt M16×1.5×24	1
D-24	540707	Level gauge ,M16×1.5×10	1
D-25	540708	Protective sleeve	1
D-26	540709	O-ring seal 105×5.7	1
D-27	540710	O-ring seal 87.5×3.55	1
D-28	540711	Foot plate	1
D-29	540712	Socket head bolt M10×40	4
D-30	540713	Socket head bolt M10×25	4
D-31	540714	Lock nut M12	11
D-32	540715	Flat washer φ12	4
D-33	540716	Handle	1
D-34	540717	Sunk head bolt M12*100	2
D-35	540718	Rubber base plate	1
D-36	540719	Base plate	1
D-37	540720	Sunk head bolt M12*60	7
D-38	540721	Sunk head bolt M12*75	2